MOTION IMPOSSIBLE

AGITO COLUMN

OPERATIONS MANUAL

Jan 2024 (rev: 1)

» DOCUMENT REVISION HISTORY

REVISION:	DATE:	DESCRIPTION:
1.0	January 2024	Initial Document Release

» INDEX

» INTRODUCTION

This document provides information to assist with the setup, installation and safe operation of MOTION IMPOSSIBLE'S AGITO Column.

IMPORTANT:

Please read this disclaimer and warning carefully and review the AGITO user manual prior to use.

If you have any questions, please contact support@motion-impossible.com before operating.

Current version of this user manual: www.motion-impossible.com/downloads

» DISCLAIMER

Motion Impossible Limited reserves the right to revise this user manual and make changes from time to time without obligation to notify any persons of such revisions or changes. In no event shall Motion Impossible Limited, its employees or authorised agents be liable for any damages or losses, direct or indirect, arising from the use of any technical or operational information contained in this document. Every precaution has been taken in the preparation of this manual. Nevertheless, Motion Impossible Limited assumes no responsibility for errors or omissions or any damages resulting from the use of the information contained herein.

» WARNINGS

Throughout this manual important safety notices are highlighted, as follows:

This is a General Notice:
Highlighting important information relating to the system, legal requirements or other details.

THIS IS A GENERAL WARNING:
NOT FOLLOWING THIS INSTRUCTION COULD CAUSE DAMAGE TO THE SYSTEM OR OTHER EQUIPMENT ATTACHED TO IT

THIS IS A HEALTH & SAFETY WARNING:
NOT FOLLOWING THIS INSTRUCTION COULD CAUSE HARM TO THE OPERATOR OR SOMEBODY IN CLOSE PROXIMITY TO THE SYSTEM

» GENERAL SAFETY

Any individual AGITO component or assembled AGITO system is only to be used by operators with extensive prior knowledge of remote-controlled systems, they must have undergone special training approved by Motion Impossible.

- It is your responsibility to learn how to safely operate AGITO and it's components.
- It is your responsibility to perform a full system check of AGITO and it's comonents prior to every use.
- The operator must have control of all people, animals, vehicles, vessels and structures in close proximity of the AGITO when in use.
- The operator must have completed a suitable risk assessment prior to operating the AGITO and be confident that all operations can be completed safely.
- AGITO is a tuned system with custom components. Modification, removal, or substitution of AGITO components will void the warranty and any form of regulatory conformity.
- ALWAYS use factory specified replacement parts and accessories, if in doubt contact support.
- Do not disable any safety features on the system.
- Whilst the AGITO is designed to operate in various environments, most elements of the system are NOT weather Ingress Protection (IP) rated. Operating AGITO, its component parts and accessories in damp or wet environmental conditions is entirely at the operator's risk.

By using AGITO, you acknowledge that you have read, understand, and agree to this disclaimer. You agree that you are solely responsible for your conduct while using AGITO and for any direct or indirect consequences that may result from its use.

AGITO IS A BATTERY POWERED DEVICE, OPERATED AT 48VDC
DO NOT OPEN ANY WARRANTY SEALED COMPARTMENTS

» BATTERIES

You must read these safety instructions and warnings carefully before charging or using your AGITO Battery Pack. Improper use may result in damage to the batteries, severe personal injury, and even fire. By purchasing an AGITO Battery Pack, the buyer agrees to bear all responsibilities of the risks and not hold Motion Impossible Ltd, its owners and employees, its distributors, and/or its retailers responsible for any accidents, injury to persons, and property damage. If you do not agree to these conditions, please return the AGITO Battery Pack to the place of purchase in a new and unused condition.

- Do not allow the batteries to come into contact with any kind of liquid. Do not leave batteries out in the rain or near a source of moisture. Do not drop the battery into water. If the inside of the battery comes into contact with water, chemical decomposition may occur, potentially resulting in the battery catching on fire, and may even lead to an explosion.
- If the battery falls into water by accident, put it in a safe and open area immediately. Maintain a safe distance from the battery until it is completely dry. Never use the battery again, and dispose of the battery properly as described in the Battery Disposal section below.
- Put out any battery fire using water, sand, fire blanket or a dry powder fire extinguisher.
- Never use or charge swollen, leaky, or damaged batteries. If your batteries are abnormal, contact Motion Impossible or an authorised dealer for further assistance.
- The battery should be used in temperatures from 0 to +50°C Use of the battery in environments above 50°C can lead to a fire or explosion. Use of battery below -10°C can lead to permanent damage.
- Do not use the battery in strong electrostatic or electromagnetic environments. Otherwise, the battery may malfunction.
- Never disassemble or pierce the battery in any way or the battery may leak, catch fire, or explode.
- Do not drop or strike batteries. Do not place heavy objects on the batteries or charger.
- Electrolytes in the battery are highly corrosive. If any electrolytes make contact with your skin or eyes, immediately wash the affected area with fresh running water for at least 15 minutes, and then seek medical attention immediately.
- Do not use the battery if it received impact from a fall or other accidents.
- Do not heat batteries. Do not put batteries in a microwave oven or in a pressurized container.
- Do not manually short-circuit the battery. Do not store batteries with any conductive objects that could cause short circuiting.
- Only transport batteries in an approved carrying case.
- Do not put batteries in your pocket without a proper carrying case.
- Clean battery terminals with a clean, dry cloth only.
- Never remove the protective wrap of the batteries.
- When a battery's capacity is diminished with use it must be recycled according to your local by-laws.

- If a battery pack becomes or appears damaged STOP using it immediately.
- Never disassemble, modify, puncture, shock, crash, short circuit, and/or expose Battery Packs to a flame. Leakage, smoke emission, ignition, explosion or fire can occur, which may result in personal injury or property damage.

» BATTERY CHARGING

- Do not leave AGITO Battery Packs and charger unattended when in use.
- Do not attach the batteries to wall outlets or car charger sockets directly.
- Motion Impossible takes no responsibility if the battery is charged using a non-Motion Impossible charger.
- Do not charge the battery near flammable materials or on flammable surfaces such as carpet or wood.
- Do not charge the battery immediately after use, because the battery temperature may be too high.
- Do not charge the battery until it cools down to near room temperature.
- Charging the battery outside of the temperature range of 14-40°C may lead to leakage, overheating, or battery damage.
- Disconnect the charger or charger cable when not in use. Examine the charger, adapter and cable regularly for damage to the cord, plug, enclosure, or other parts. Do not clean the charger with denatured alcohol or other flammable solvents.
- Never use a damaged charger or cable.

» BATTERY STORAGE

- Keep batteries out of the reach of children and pets.
- Do not leave the battery near heat sources such as a furnace or heater.
- Do not leave the batteries inside of a vehicle on hot days, the ideal storage temperature is between 22-28°C (71-82°F).
- Always keep the battery in a dry place.
- Do not store the battery fully discharged for long periods of time, otherwise it will over discharge and lead to permanent damage.

RECOMMENDED: Batteries must remain at a charge level of between 90-50% when in storage, batteries left for more than one month must be charged for a minimum of 30mins (or longer if fully discharged) once a month. Do not leave batteries uncharged, or at a charge level of less than 50%, doing so may damage the battery cells, resulting in reduced life span or in extreme circumstances failure to hold a charge.

» BATTERY DISPOSAL

Dispose of AGITO batteries in specific recycling boxes only after a complete discharge.

DO NOT PLACE THE BATTERY IN REGULAR TRASH CONTAINERS. STRICTLY FOLLOW YOUR LOCAL REGULATIONS REGARDING THE DISPOSAL AND RECYCLING OF BATTERIES.

» WARRANTY & SERVICE

AGITO and it's components come with a return-to-base 12-month Warranty from the original date of shipment.

Please note that opening any compartment or casing of the AGITO CORE, MASTER, RF Modules, Drive-end, Tower, or any other component or official accessory is not permitted. Bypassing control features or interrupting the control protocol is not permitted.

All Servicing, beyond the basic maintenance outlined in this manual must be undertaken by an officially authorised technician at a Motion Impossible certified service centre.

There are no user repairable parts, beyond those outlined in this manual. Attempting to undertake any repair, modification or attaching any non-authorised mechanical, electrical or electronic component to the system will void your warranty and may remove conformity.

» GENERAL SPECIFICATIONS

Model	AGITO 99WH BATTERY (V1.0)
Chemistry	Lithium-Ion
Voltage / Capacity	48v DC / 99.9Wh
Charging Voltage	50.4v DC
Operational Ambient Temp. Range	0 - +50 °C
Storage Temperature Range	-20 - +50 °C (Ideal 22-28 °C)

Model	AGITO COLUMN (V1.0)
Power Input	48v DC
Weight	19.7kg (43.4lbs)
Max Payload	45kg (100lbs)
Max Speed	100mm/sec (4"/sec)
Min Height	635mm (25") - Not including baseplate
Max Height	1215mm (48") - Not including baseplate
Power Consumption during movement	0.5A - 7A (Speed & Payload dependant)
Power Consumption when idle	≤0.06A

Module specific specifications are located in the relevant sections of this manual. Details quoted are for the most recent variant of the module, E&OE.

» TRAINING AND FURTHER ASSISTANCE

AGITO Academy offers a full range of training for the AGITO Modular Dolly System, online through video guides and our support website as well as face-to-face training.

Throughout this manual, web links to online training, our support website and knowledge base are show as follows:

https://motion-impossible.com/support/support-portal/
https://motion-impossible.com/how-to-videos/

» CASE CONTENTS, DIMENSIONS & WEIGHTS

» COLUMN CASE

Case ID:	Dimension (HxWxD)	Shipped Weight:
COLUMN	550 x 820 x 430 mm 21.5 x 32 x 17 inches	38 Kg 83.7 lbs

Item:	Part Name:
1	AGITO Column
2	AGITO QR Plate
3	AGITO Column Baseplate / AGITO Cine Column Baseplate
4	AGITO Column Cable Stand-offs (x2)
5	Straight Brackets (x2)
6	48V Power Cable (Right-angle)
7	AGITO Ethernet RJ45 30cm Cables (x2)
8	48V AGITO Battery Caddy (Optional extra)
9	Tower/Column Power Passthrough Cable Set (Optional extra) (Different varients available)
10	Column Belt Tension Tool A (Segment Belts)
11	Column Belt Tension Tool B (Drive Belts)

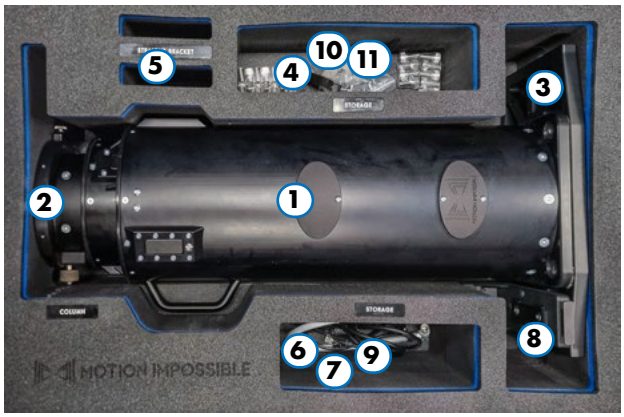

» SYSTEM OVERVIEW: AGITO COLUMN

» INTRODUCTION

The AGITO Column is the heavyweight lifter for the AGITO system, designed for use on all AGITO configurations. Able to take a payload up to 45kg (100lb) and unlike the AGITO Tower it can be also used underslung with AGITO SkyTrax configurations as well as lifting underslung payloads.

» DIMENSIONS

See "Technical Drawings" on page 17

» KEY FEATURES

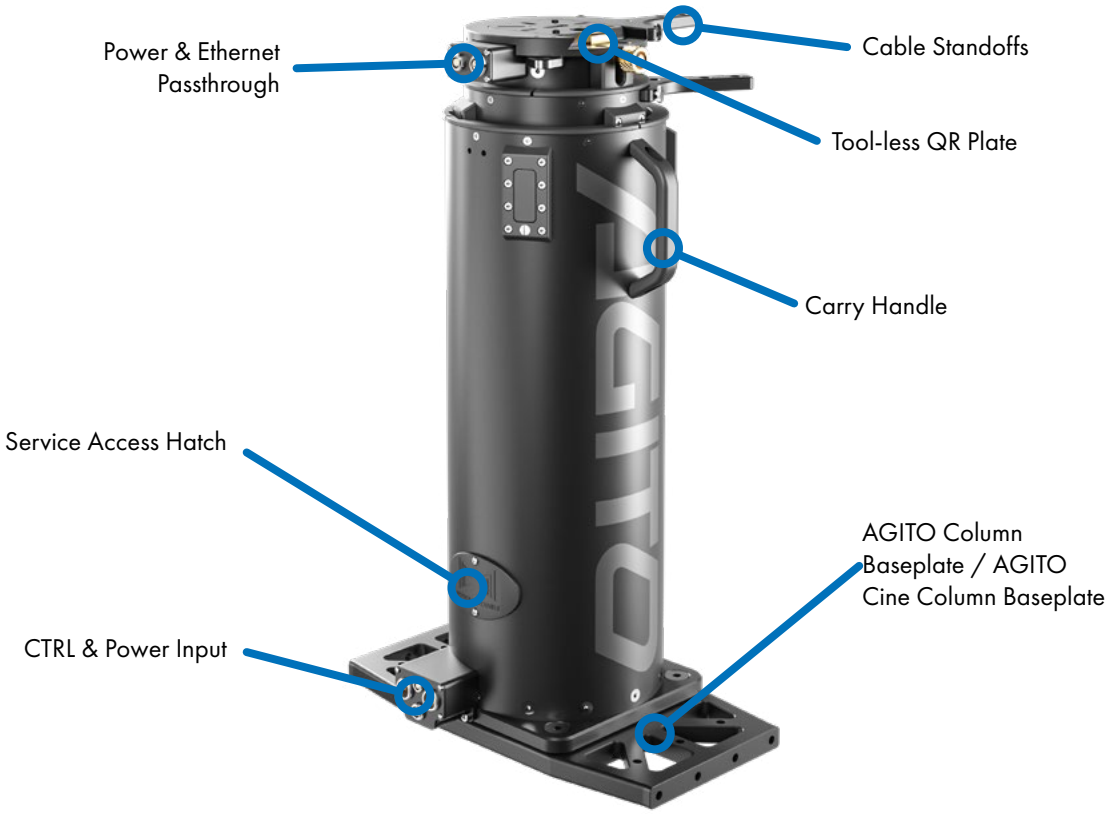

ONLY MOTION IMPOSSIBLE APPROVED BATTERY PACKS SHOULD BE USED TO PREVENT DAMAGE TO THE SYSTEM.

» I/O PORTS (BASE)

- DC-IN – 2 Pin 2B Lemo for 48V input
- Power-Passthrough Input – 3-Pin 2B Lemo with various configurations for different remote heads.
- Ethernet Passthrough Input - 10-Pin 1T Lemo
- CAN Comms Control Input - 5-Pin 0B Lemo

» I/O PORTS (TOP)

- Power-Passthrough Output – 3-Pin 2B Lemo with various configurations for different remote heads.
- Ethernet Passthrough Output - 10-Pin 1T Lemo

For connector pinout information see "Pin-outs" on page 19.

» SETTING UP AGITO COLUMN

AGITO is supplied with a tool kit which includes all of the necessary tools to perform all of the set-up's and basic maintenance as outlined in this manual. Should any of these tools need replacing please see our recommendations below:

Metric Hex Keys: 2.5mm, 3mm, 4mm, 5mm, 6mm; Imperial Hex Keys: 7/32", 5/16"; AGITO Wheel Nut tool

PLEASE ENSURE YOU USE THE CORRECT TOOLS TO AVOID DAMAGE TO SCREW HEADS.

» MOUNTING & CONNECTING TO AGITO (UPRIGHT)

If not already fitted, attach the correct base plate to the base of the column using 4x 3/8" CSK bolts. For AGITO Gen 1 & Gen 2 systems use the AGITO Column Baseplate (Width: xxmm), for AGITO Cine systems use the AGITO Cine Column Baseplate (Width: xxmm).

Attach the two Straight Brackets to the mounting rails of the AGITO Core using at least 4x 3/8" CAP bolts, making sure that the two plates are parallel to eachother.

Place the Column onto the Straight Brackets and secure with at least 4x 3/8" CAP bolts.

AGITO GEN1:
Plug the tower control cable in to the smallest port on the Column I/O and into AUX2 on the Core I/O.

AGITO GEN 2 / CINE:
Plug the CAN Control Cable into the smallest port on the Column I/O and into either AUX 3 or 4.

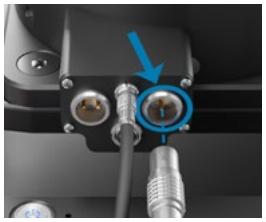

Connect the DC-IN with the 48V Power cable to either of the following's 48V output:
AGITO 48V Battery Caddy | AGITO PSU | AGITO GEN2/CINE Core.

» MOUNTING & CONNECTING TO AGITO (UNDERSLUNG/SKYTRAX)

If already fitted, remove the Column Baseplate from the base of the Column by removing the 4x 3/8" CSK bolts.

Attach the Skytrax Underslung Mounting Bracket *[P/N: AG-SK-UMB]* on to the underside of the AGITO Core via the mounting rails with 4x 3/8" CSK bolts. Ensure the position of the bracket does not interfere with the Core's battery pockets.

Lift the Column up to the base of the Underslung Mounting Bracket and secure in place with 4x 3/8" CSK Bolts. Ensure these bolts are secured tightly.

AGITO GEN1:
Plug the Tower Control Cable in to the smallest port on the Column I/O and into AUX2 on the Core I/O.

AGITO GEN 2 / CINE:
Plug the CAN Control Cable into the smallest port on the Column I/O and into either AUX 3 or 4.

Connect the DC-IN with the 48V Power cable to either of the following's 48V output:
AGITO 48V Battery Caddy | AGITO PSU | AGITO GEN2/CINE Core.

» ATTACHING A PAYLOAD VIA THE QR PLATE

ALWAYS ENSURE THE PAYLOAD IS PROPERLY AND SECURELY FIXED TO THE QR PLATE, USE A MINIMUM OF FOUR FIXINGS, OR THE RECCOMENDED AMOUNT FOR THE SPECIFIC PAYLOAD.

Loosen the brass knurled knob on the top of the Column and pull the mechanism down.

Slide the QR Plate out.

Align the Quick Release Plate with the holes on the Remote Head
Inset and tighten the four bolts, **be careful to use the correct length & thread pitch bolts**

Slide the Quick Release Plate back into the top of the Column.
Ensure the Plate is located correctly, tighten the brass knurled knob to secure in place

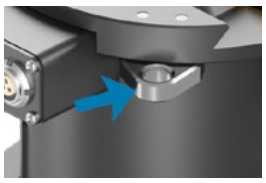

For up-side-down operation, for instance hanging from a SkyTrax system, it is highly recommended to fit a steel safety cable between the payload and column. In most cases it is mandatory, even when not over people.

» ATTACHING THE CABLE STANDOFFS

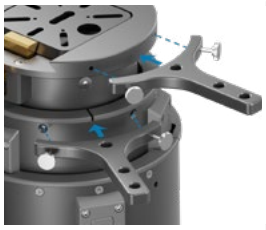

Align the cable stand-off with the two holes in the top of the column.

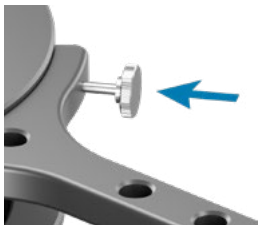

Twist the thumb screws into place, making sure not to cross-thread.

» OFFSET MOUNTING BRACKETS

Using the optional offset mounting brackets, it is possible to off-set mounts over the drive-ends.
(Note: this will restrict the mounting of accessories such as PSU)

» USING WITH AN AGITO BATTERY CADDY

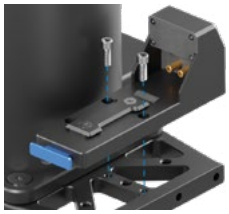

Attach the AGITO Battery caddy to the AGITO Column Baseplate using 2x 1/4" CAP screws.

Connect the AGITO Battery Caddy to the AGITO Column using the supplied cable.

THERE IS NO REMOTE BATTERY CAPACITY READOUT USING THIS METHOD, REGULARLY CHECK THE BATTERY VOLTAGE LEVEL ON THE BATTERY AND REPLACE IF IT IS LOW, UNEXPECTED COLUMN BEHAVIOURS MAY OCCUR ON VERY DISCHARGED BATTERIES.

» POWER & ETHERNET PASS-THROUGH

» OVERVIEW

The AGITO Column is supplied with power pass-through and ethernet pass-through.

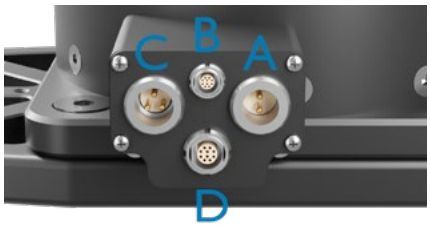

» POWER PASS-THROUGH

The Column is equipped internally with a 3-core power line. This can be used when combined with one of three cable sets to allow up to two different voltages to be passed from the base of the tower to the top. Shown as the "C" connectors in the two images above.

ARRI SRH-3 & SRH-360
The MI SRH cable set (AG-TO-801) is wired to provide both 12Vdc and 24Vdc circuits from the standard ARRI High Capacity cables commonly supplied. The Arri manual provides details of recommended batteries, power solutions and wiring requirements.

The following cable is required when using the AGITO PSU:
- SRH High Capacity Battery Power Cable 12V/24V, 0.5m/1.64ft (K2.0019306)

SHOTOVER G1
The MI G1cable set (AG-TO-802) is wired to provide a 48Vdc circuit from the standard SHOTOVER G1 Lemo Power Cable. The Shotover manual provides details of recommended batteries, power solutions and wiring requirements.

OTHER REMOTE HEADS
If you intend to use another remote head, the MI Bare-ends cable set (AG-TO-809) provides bare-ends for custom configurations. The internal wiring uses standard 1.5mm^2 cores. Pinout diagrams can be found on page 19.

» ETHERNET PASS-THROUGH

The Ethernet passthrough on the column uses the same MI Standard of 10-Pin 1T Lemo that is used across the AGITO ecosystem as shown as the "D" connectors in the two images above. 2x converter cables to RJ45 come with the column as standard. Pinout diagrams can be found on page 19.

» MAINTENANCE

There are very few user-serviceable items on the chassis. However, keeping the AGITO clean using a dry cloth, brush and air duster before and after use is highly recommended. Applying 3-in-1 lubricant is recommended especially if the unit gets wet, be careful to clean away grit/sand/debris before applying

» CLEANING AND LUBRICATION

Even when used indoors, the AGITO Column will require some cleaning and lubrication to keep operating smoothly and reliably. The service interval depends on use intensitivity and conditions.

» LUBRICATION RECCOMENDATIONS

Lubrication brands and availability varies around the world, however here is a few reccomendations for usage in lubricating AGITO Column:

General Lubrication: Teflon/PTFE based spray, such as WD-40 Dry PTFE
Spindle Lubrication: Copper Grease

» CLEANING OUTSIDE SURFACES

Wipe dirt and grease fom all outside surfaces. Keep it as dry as possible.

» INTERNAL DUST & DEBRIS

Blowing the Column our with an air hose is NOT advised as the spindle inside is greasy and dirt flying around inside it will stick to it. The best way is to hang the column upside down and rely on gravity to remove any dirt or debris.

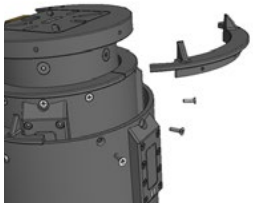

Remove the 6 segment rim trimmings, 3 on the base segment and 3 on the mid segment.

Remove the 3 Service Covers around the base section.

Hang the Column upside down on something safe and rigid.

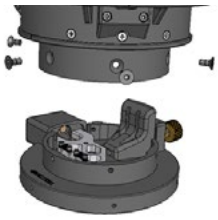

Remove the 5 screws around the top centre segment and remove the top plate. This will hang from the coiled internal passthrough cables.

Using a vaccum cleaner remove any dirt or debris from the inner mechanism. Tapping the Column can help loosen dirt that will then fall out. The access holes will provide open air flow through the column.

Return the column upright and reattach the top plate.

Replace the Service Covers and Rim Trimmings.

» CLEANING THE BELT DRIVE

The belt drive compartment in the underside of the column is well protected, however dust may build up over time.

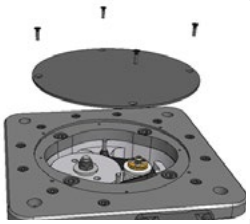

Remove the four screws on the underside around the circular plate. These can be tight so ensure to use the correct bit (PH1) and apply sufficient pressure to prevent it skipping.

Remove the circular plate and inspect for dust & check the condition of the belt.

If dust or debris is present blow out with compressed air. No lubricant, grease or cleaning chemicals should be used on the belt.

» LUBRICATION OF THE SEGMENTS

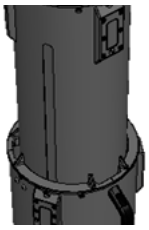

Extend the Column, three slots will appear in each segment.

Wipe each of the 6 slots with a small sponge and a Teflon-based spray, wiping in the direction away from the roller unit.

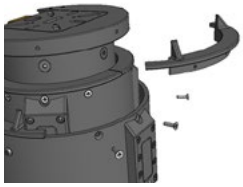

Inside the column are sliding blocks, for smooth operation they require an occasional application of Teflon lubrication. First remove the Rim Trimmings to access inside.

Find the sliding blocks and felt wipers, spray some Teflon spray onto the inside wall to soak the felt.

Move the column up and down several times to spread the lubrication across the length of the column.

Replace the Rim Trimmings.

» LUBRICATION OF THE SPINDLE

Depending on use intensity it is good to occasionally grease the spindle to keep it running smoothly.

Extend the Column to max height. Then remove the access covers to reveal the spindle.

Using a brush with a long handle, apply some copper grease on to the spindle. A few patches are enough, the spindle nut passing by will smear the grease out.

If you accidentally get some on the nearby belts you can just wipe clean with a paper towel. Do not use any cleaning chemicals on the belts.

THE SPINDLE SHOULD NOT BE OVER LUBRICATED, ESPECIALLY WITH LARGE CLUMPS OF GREASE. AS FAST OPERATION WILL THROW THE CLUMPS OFF OF THE SPINDLE ONTO OTHER PARTS OF THE INTERNALS.

» ADJUSTING THE BELT TENSIONS

On the AGITO Column there are three belts in total: two that connect the telescoping segments, and one that drives the lifting spindle. A check-up from time to time is good to do. We reccomend a check is due every 6 months for optimal operation. Included with the AGITO Column is are two tension check tools, one for the drive-belt, and one for the segment belts. If you have misplaced yours and require a replacement please contact support.

» TENSION OF THE DRIVE BELT

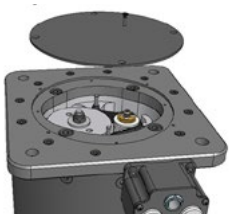

Remove the four screws on the underside around the circular plate. These can be tight so ensure to use the correct bit (PH1) and apply sufficient pressure to prevent it skipping. Then remove the circular cover and check the tension of the belt.

To check the tension you first need to ensure the column is resting horizontally and perfectly level, you can use the tool to check level. Rotate the column so that the top of the belt is horizontal.

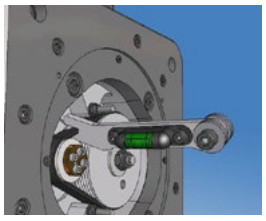

Then place the slot in the tension check tool onto the drive belt and let it hang under tension. The bubble will be level when the belt is at the right tension. If the tool is resting too high, release the tension. If it is resting too low, increase the tension.

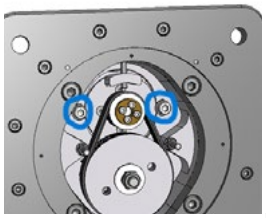

If adjustment is needed loosen the two screws near the motor so that the motor can slide.

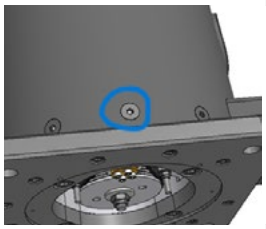

Then lay the column on its side with the motor (small pulley) facing to the side and remove the screw closest to the small pulley around the base segment, to access the tension screw.

Using a long 4mm allen key through the hole you can adjust the tension. You may need to raise the column slightly to move the segments out of the way and gain access to the screw. This can be done manually by turning the large pulley.

» TENSION OF THE SEGMENT BELTS

With the Column compressed, remove the three access covers around the side to reveal the service holes and check the belt tension underneath.

Through the service cover insert the belt-check tool and apply pressure to open the jaws, then place the tool over the belt and it will apply pressure to the belt. The line on the tool's shaft will line up with the indicator when the belt is at correct level. If the line passes past the indicator, that belt requires more tension.

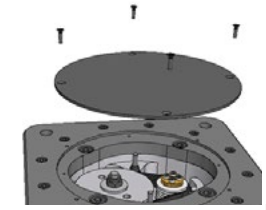

To access the tension nuts, remove the four screws on the underside around the circular plate. These can be tight so ensure to use the correct bit (PH1) and apply sufficient pressure to prevent it skipping. Then remove the circular cover.

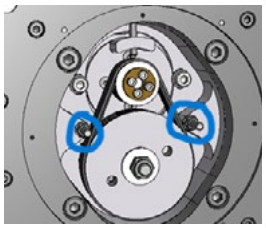

In the center, eather side of the belt are two visible nuts, one for each belt: Left & Right. Turn the nuts to tension each belt.

DO NOT OVERTIGHTEN THE BELT
ALTHOUGH SOME TENSION IS NEEDED FOR CARRYING LIGHT LOADS, TOO LOOSE BELTS WILL NOT HARM THE COLUMN WHERAS TOO HIGH TENSION CAN BREAK THE BELTS WHEN USED WITH HEAVY LOADS, RESULTING IN SERIOUS REPAIRS.

» ADJUSTING MECHANICAL SLOP

The AGITO Column uses steel bearing rollers to align and contain the movements of each individual section. Depending on Column usage adjustment to the pressures of these rollers may require adjustment. The method of tensioning is the same for the mid and lower segments.

» ADJUSTING THE ROLLER UNIT PRESSURES

On each of the six roller units is a small screw that ajdusts the pressure the roller puts on the inner segment. Tightening the screw will increase the pressure into the the segment, loosening the screw will release the pressure.

BE CAREFUL NOT TO OVERTIGHTEN THE PRESSURE SCREW AS IT CAN CAUSE THE BEARINGS TO BREAK

» ROTATIONAL PLAY ("TWIST")

If the Column shows rotational play then the rollers need to be adjusted using the process above. One of the three slots per segment is narrower than the other two. On the lower section is it the slot opposite the carry hande, on the upper section it is the slot closest to the handle.

The narrower slot fits the roller perfectly and helps prevent the rotational movement. If the Column has excessive rotational play the other two rollers need to be tightened.

THE NATURE OF THIS CIRCULAR SETUP ALLOWS SERIOUS ROTATIONAL FORCES TO TWIST THE COLUMN. CARE SHOULD BE TAKEN WHEN USING HEAVY CAMERA'S AND HEADS, WITH HIGH INERTIA, NOT TO MAKE TOO HARSH PAN MOVEMENTS. OTHERWISE FREQUENT PLAY ADJUSTMENT WILL BE NEEDED AND POSSIBLE ROLLER REPLACEMENT IN DUE COURSE OR AFTER IMMEDIATE OVERLOAD.

» GENERAL PRESSURE SETTING

Due to the triangle arrangement of the rollers the pressure between them will always be equalled out, however the pressure should be high enough to stabilise the Column but not so high that the rollers will suffer. The pressure setting of each roller should be even to centralise the segments properly. The gap between the segments can be measured to ensure they are set evenly.

» TECHNICAL DRAWINGS

» AGITO COLUMN

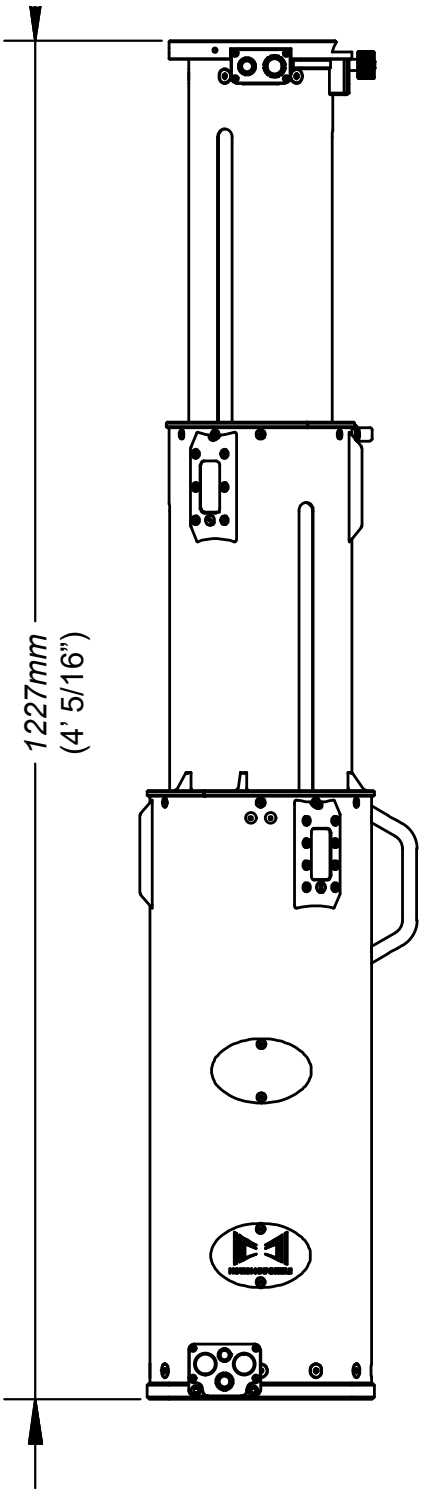

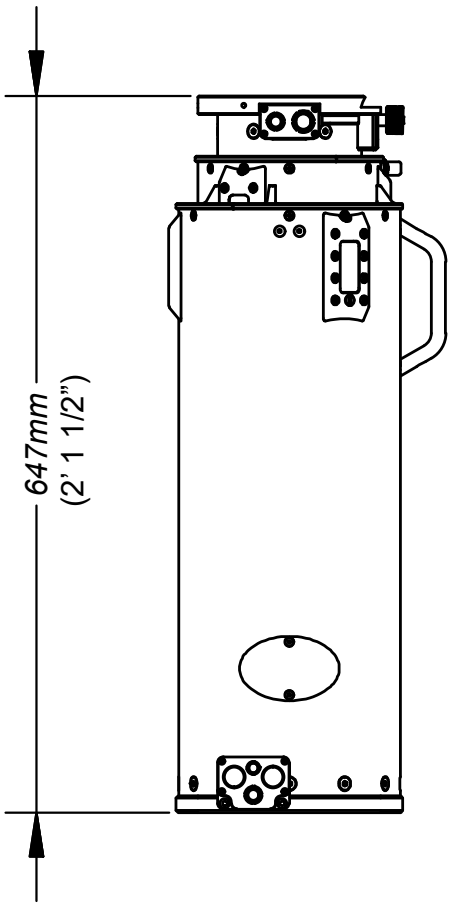

» COLUMN FIXING HOLE PATTERN

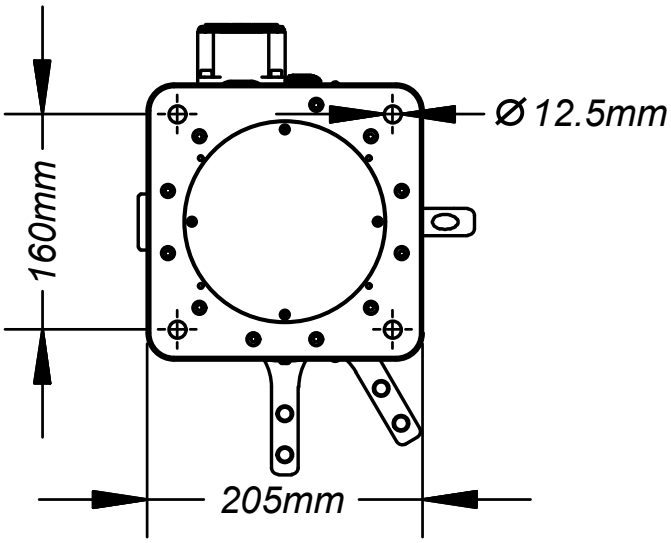

» AGITO QR PLATE

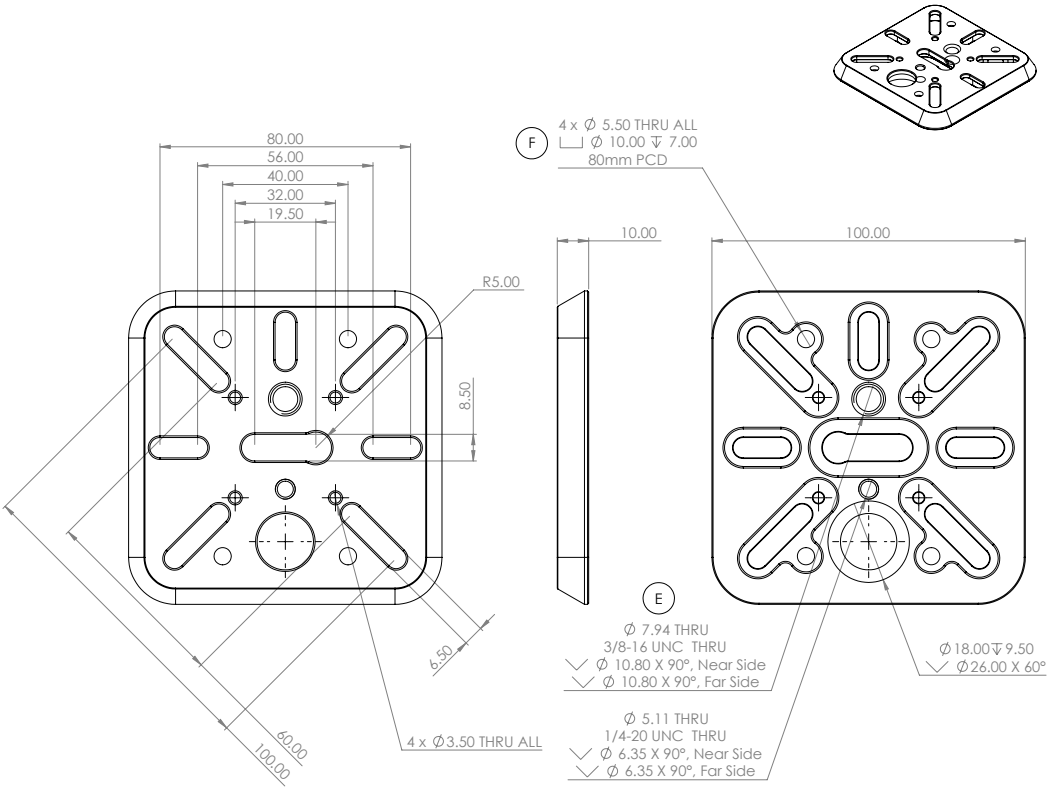

» PIN-OUTS

» AGITO COLUMN I/O CONNECTIONS

Connector Label	Connector P/N	Pin	Description AUX1	Mating Connector P/N
48V DC Input	LEMO ECJ.2B.302.CYC	1	+48V In (38-50V DC)	LEMO FGJ.2B.302.CLL
		2	GND	

Connector Label	Connector P/N	Pin	Description	Mating Connector P/N
Power pass-through (lower)	LEMO ECJ.2B.303.CYC	1	GND	LEMO FGJ.2B.303.CLL
Power pass-through (upper)	LEMO ECG.2B.303.CYM	2	+12VDC (Arri SRH-3) +48VDC (Shotover G1)	LEMO FGG.2B.303.CLA
		3	+24VDC (Arri SRH-3) n/c (Shotover G1)	

Connector Label	Connector P/N	Pin	Description	Mating Connector P/N
Ethernet pass-through (lower & upper)	EEG.1B.310.CLL	1	Ethernet MX-1P CTS (white-orange)	FGG.1T.310.CLA
		2	Ethernet MX-1N DTR (orange)	
		3	Ethernet MX-2P GND (white-green)	
		4	Ethernet MX-2N DCD (green)	
		5	Ethernet MX-3P TXD (blue)	
		6	Ethernet MX-3N RXD (white-blue)	
		7	Ethernet MX-4P DSR (white-brown)	
		8	Ethernet MX-4N RTS (brown)	
		9	N/C	
		10	N/C	

Connector Label	Connector P/N	Pin	Description	Mating Connector P/N
Tower CTL	ECG.0B.305.CYM	1	GND	FGG.0B.305.CYC
		2	CAN L	
		3	CAN H	
		4	+12VDC	
		5	N/C	

» SUPPORT

» TROUBLESHOOTING

More information and the latest updates are available on the Motion Impossible Knowledge Base:
https://motion-impossible.com/support/support-portal/

ISSUE	SOLUTION
Column plugged in but not appearing in the system map on the Master Controller	Check the column is properly receiving power and that the communications cable is not damaged. Check Core & Master are running at least firmware r5.3.00.
Column is showing on the system map but has no up/down control	Check the Lifter Controls have been enabled for that drive mode "Drive settings > Lifter Controls > Lifter Enabled"
Column only moves in one direction	Check or clear the set height endstops. If the column is outside the bounds of its endstops it can only travel in one direction.
Column has no movement, is being detected by the system and is enabled	Check the Lifter Speed and Acceleration settings are above 0%
Column moving slowly upwards or stopping part-way	Check input voltage. Too low voltage causes column to not run at proper speeds and can cause a following error.

» FURTHER SUPPORT

For technical documents, spares and assistance please visit:
https://motion-impossible.com/support/support-portal/

For training videos please visit:
https://motion-impossible.com/how-to-videos/

» EU, REST OF WORLD

Office: +44 1454 501010 (UK Office Hours, Mon-Fri: 1000-1700 GMT / BST)
WhatsApp: +44 7873 219868 (UK Office Hours, Mon-Fri: 1000-1700 GMT / BST)
Email: support@motion-impossible.com (Monitored 7 days a week)

MOTION IMPOSSIBLE - Sales & Support
Unit 12 Brunel Court
Dean Road
BRISTOL BS37 5NR
United Kingdom

» NORTH AMERICA

ABELCINE, New York - Sales & Support
Industry City
88 35th St, 4th Fl
Brooklyn
NY 11232
USA

ABELCINE, Los Angeles - Sales & Support
801 South Main St.
Burbank
CA 91506
USA

» ASIA

ARRI Asia - Sales & Support
41/F One Kowloon,
1 Wang Yuen Street Kowloon Bay
Hong Kong
P.R. China